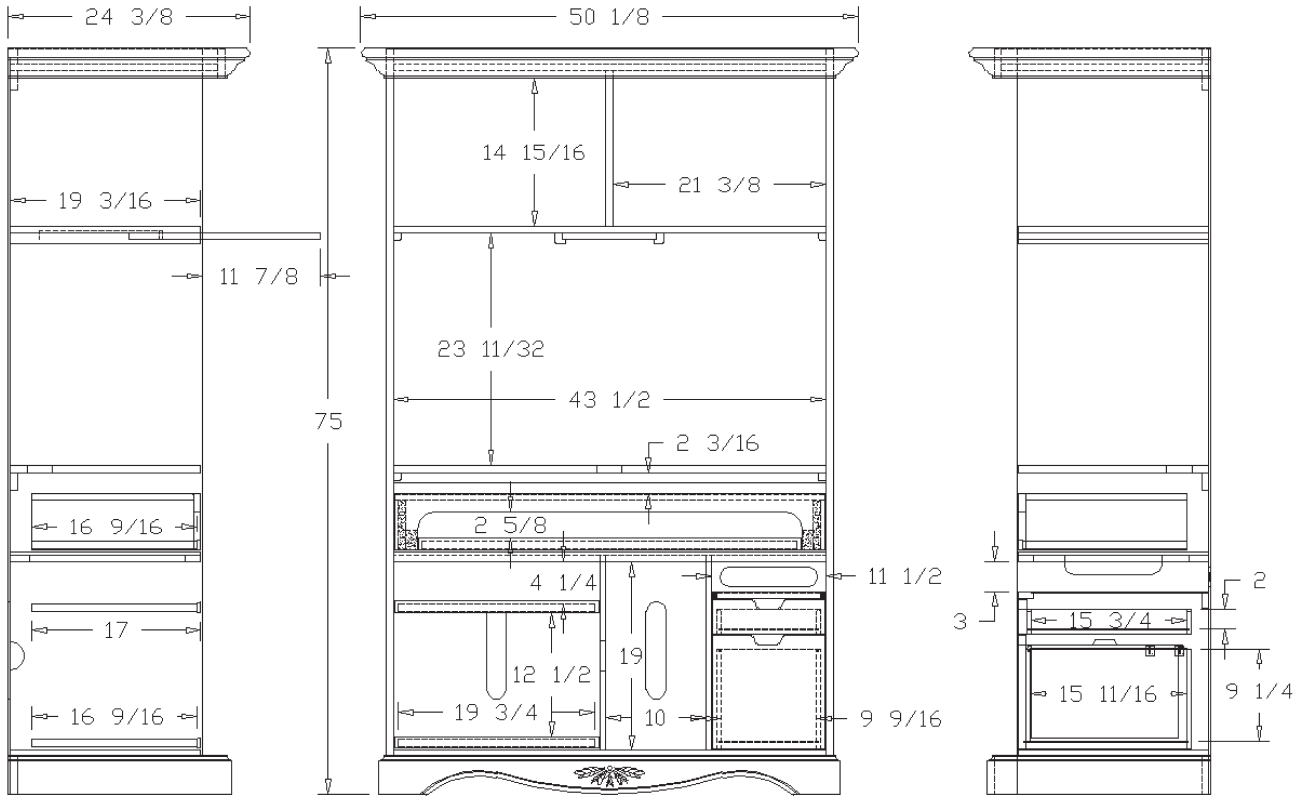Haverhill Office
88085